* Center of horizontal to center of splice dimension may vary. Verify before drilling holes in mounting tube.

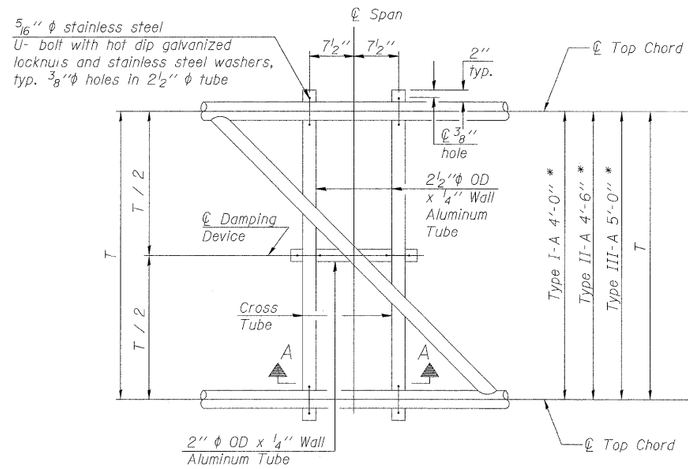

PLAN DETAIL "A"
℄ Span between Panel Points

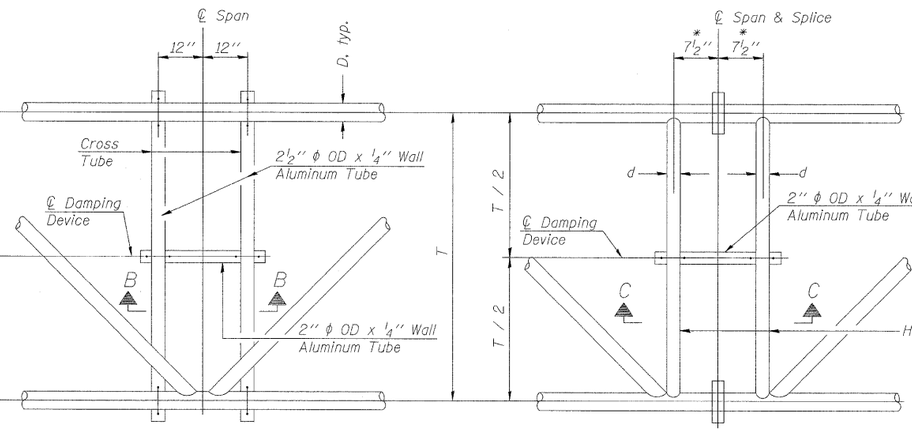

PLAN DETAIL "B"
℄ Span at Panel Point

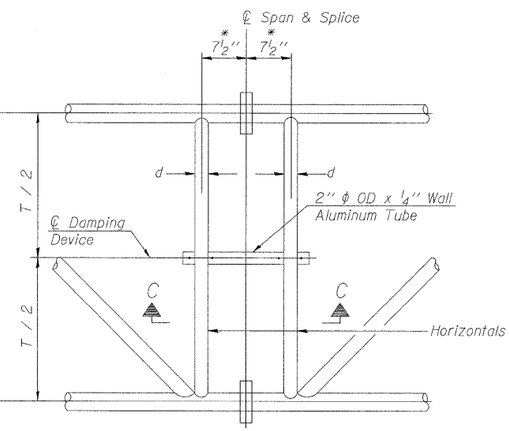

PLAN DETAIL "C"
℄ Span at ℄ Chord Splice

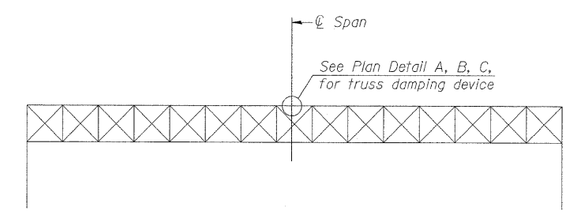

ELEVATION
Aluminum Overhead Sign Truss

NOTES

Damper: One damper per truss. (31 lbs. minimum Stockbridge-Type Aluminum - 29" minimum between ends of weights) Cost included in Overhead Sign Structure...

Materials: Materials: Aluminum tubes shall be ASTM B221 alloy 6061 temper T6. Cost included in Overhead Sign Structure...

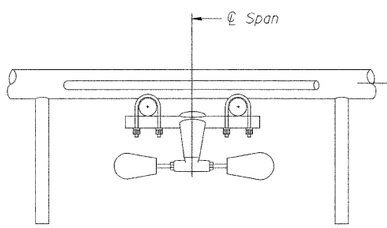

SECTION A-A

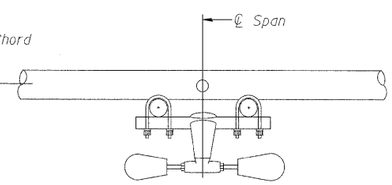

SECTION B-B

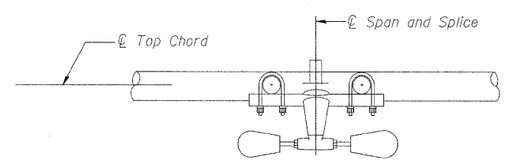

SECTION C-C

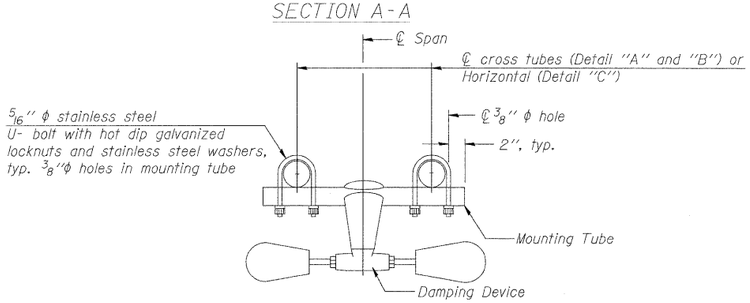

TRUSS DAMPING DEVICE CONNECTION DETAIL
(Typical)

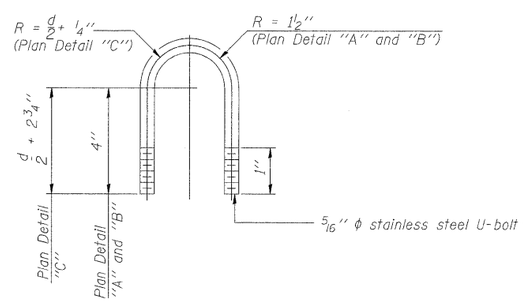

DAMPING DEVICE MOUNTING TUBE U-BOLT DETAIL
(Typical)

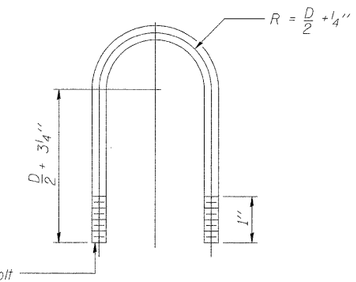

TOP CHORD TO CROSS TUBE U-BOLT DETAIL
(Typical - Detail "A" and "B")

OVERHEAD SIGN STRUCTURE DAMPING DEVICE

OS-A-D 12-1-08

FILE NAME = $FILEL$	USER NAME = $USER$	DESIGNED - ___	REVISED - ___	STATE OF ILLINOIS DEPARTMENT OF TRANSPORTATION	OVERHEAD SIGN STRUCTURE DAMPING DEVICE	F.A.I RTE.	SECTION	COUNTY	TOTAL SHEETS / SHEET NO.
		DRAWN - ___	REVISED - ___			64	Dist 8 IST 2010-3	ST CLAIR	14 / 7
	PLOT SCALE = $SCALE$	CHECKED - ___	REVISED - ___					CONTRACT NO. 76C64	
	PLOT DATE = $DATE$	DATE - _____	REVISED - ___		SCALE: _____ SHEET NO. __ OF ___ SHEETS STA. _____ TO STA. _____	FED. ROAD DIST. NO. _	ILLINOIS	FED. AID PROJECT	