ROUTE NO.	SECTION	COUNTY	TOTAL SHEETS	SHEET NO.
F.A.U. 9181	52BR	ST. CLAIR	41	35
FED. ROAD DIST. NO. 7		ILLINOIS	FED. AID PROJECT-	

SHEET NO. 19
25 SHEETS

Contract #76120

STATE OF ILLINOIS
DEPARTMENT OF TRANSPORTATION

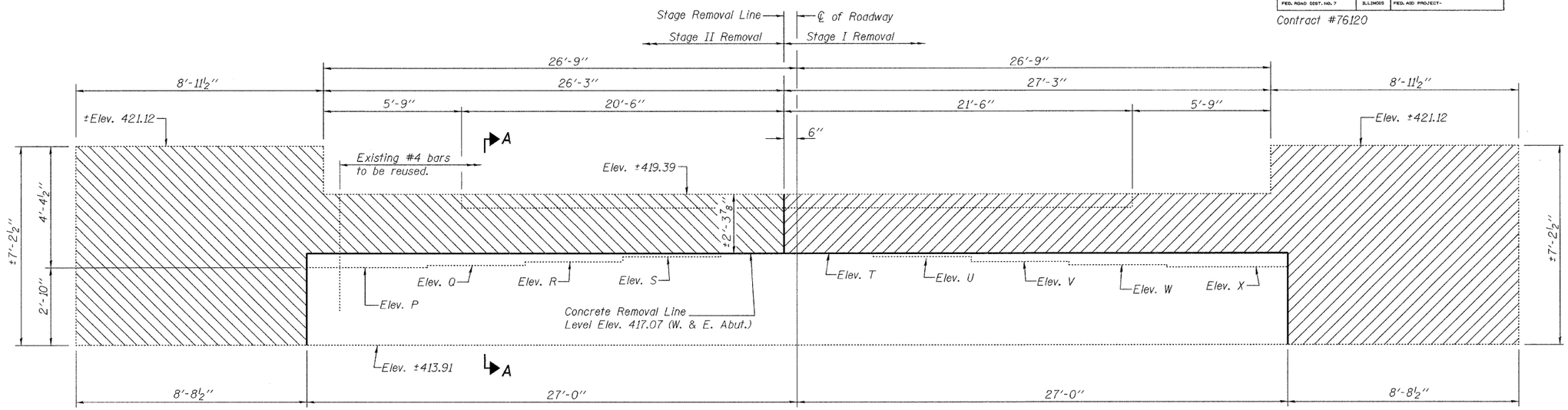

ELEVATION

(Looking East for East Abutment
West Abutment similar)

Notes:

Hatched area indicates Concrete Removal.

Existing reinforcement extending into removed areas shall be cleaned, straightened and incorporated into the new construction. Cost included with Concrete Removal.

Existing reinforcement not extending into new construction shall be cut off flush. Cost included with Concrete Removal.

Elevations P and X are under beams 10 and 1 respectiveley for the West Abutment and beams 1 and 10 respectiveley for the East Abutment.

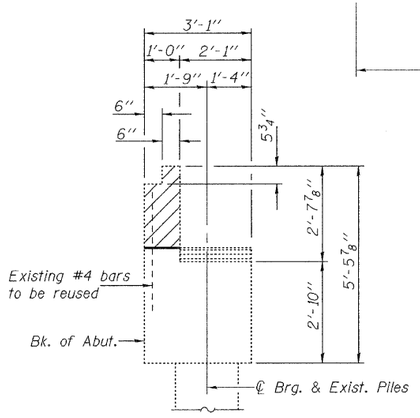

SECTION A-A

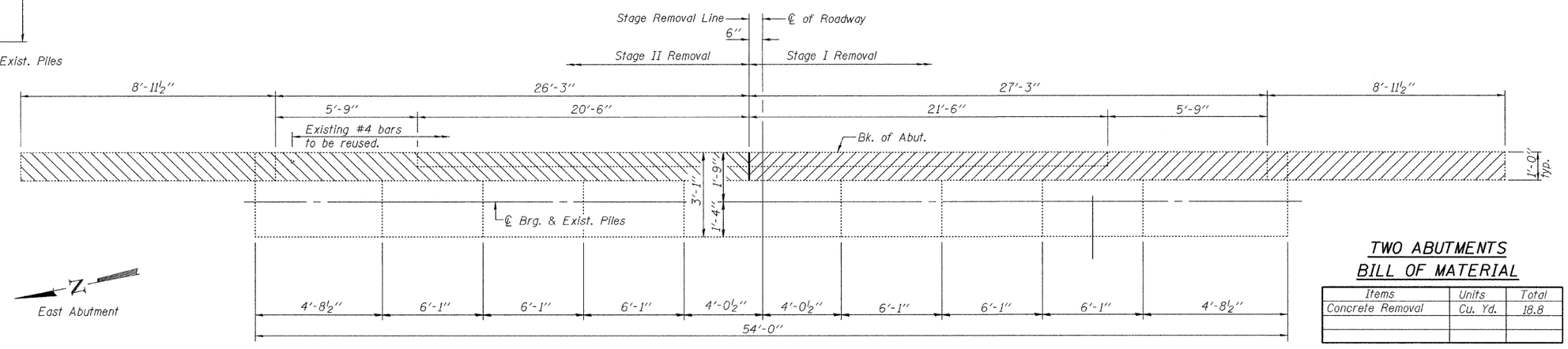

East Abutment

West Abutment

PLAN

(East Abutment shown, West Abutment Similar)

Existing Bearing Seat Elevations									
	X	W	V	U	T	S	R	Q	P
West Abutment	416.74	416.82	416.92	417.01	417.07	417.01	416.93	416.81	416.74
East Abutment	416.74	416.81	416.93	417.01	417.07	417.01	416.92	416.82	416.74

TWO ABUTMENTS BILL OF MATERIAL

Items	Units	Total
Concrete Removal	Cu. Yd.	18.8

DESIGNED	WAB/SMR
CHECKED	DFZ/FT
DRAWN	BML PAUL W. SWEET
CHECKED	DFZ/SMR/DPN/FT

November 23, 2009

EXAMINED Thomas J. Domagalski
ENGINEER OF BRIDGE DESIGN

PASSED Ralph E. Anderson
ENGINEER OF BRIDGES AND STRUCTURES

CONCRETE REMOVAL
WEST AND EAST ABUTMENTS
F.A.U. RTE. 9181 - SECTION 52BR
ST. CLAIR COUNTY
STATION 39+89.80
STRUCTURE NO. 082-0136