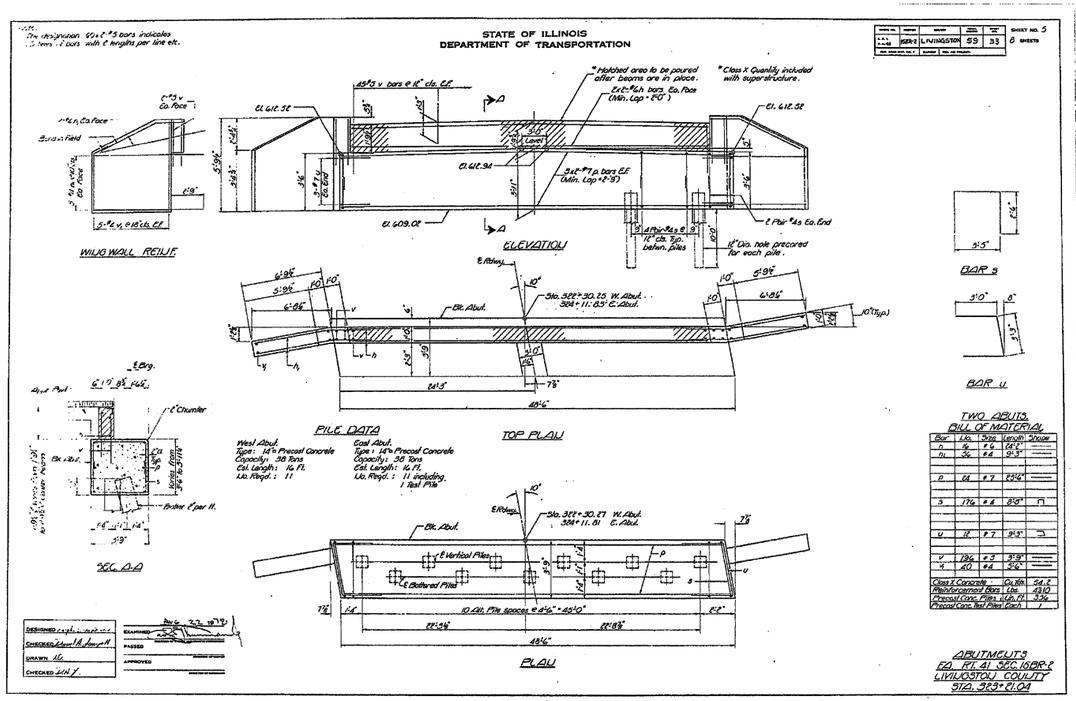

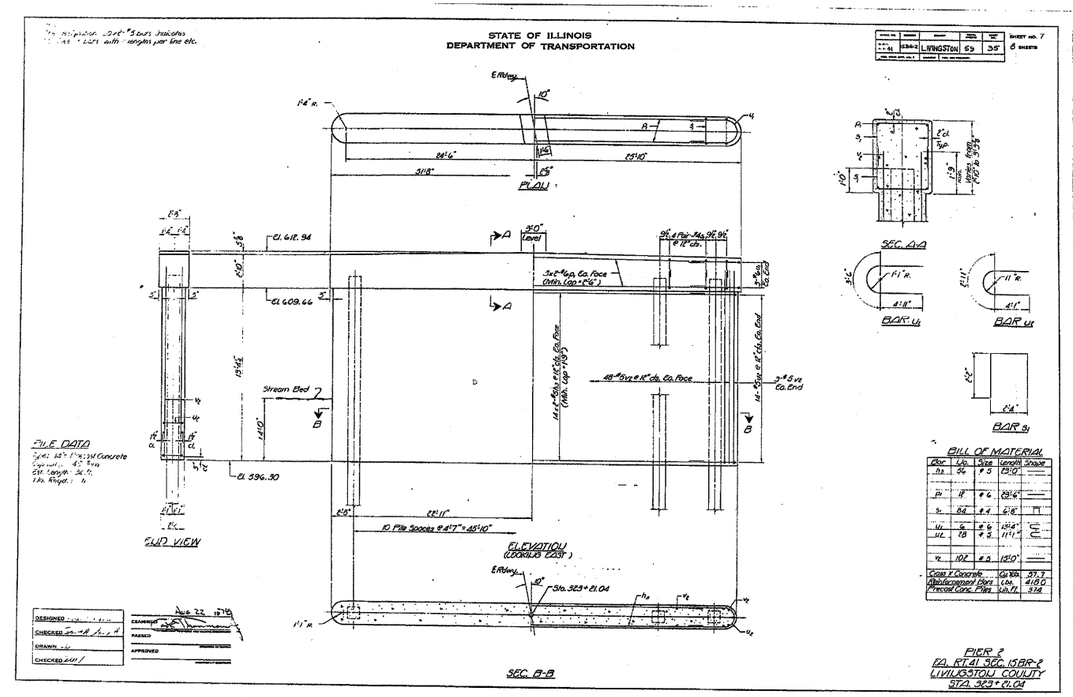

FOR INFORMATION ONLY

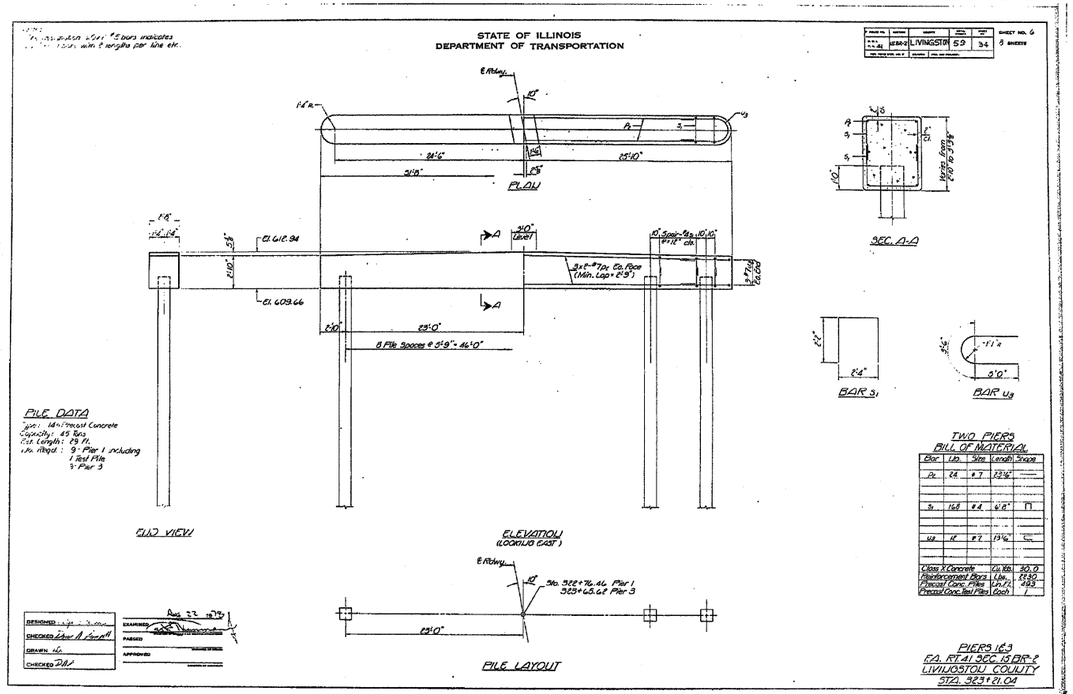

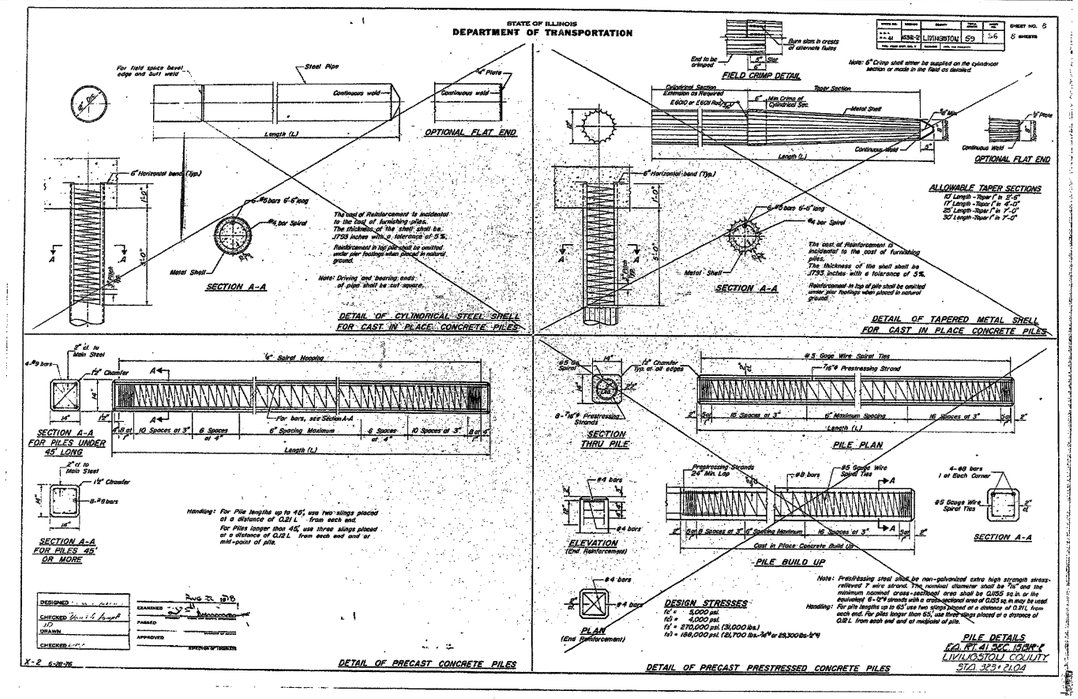

FILE NAME = c:\pw_work\pwidot\schwankerg\dms73146\Est Bridge Plans-tifs.dgn	USER NAME = schwankerg	DESIGNED -	REVISED -	STATE OF ILLINOIS DEPARTMENT OF TRANSPORTATION	EXISTING BRIDGE PLANS	F.A.P. RTE.	SECTION	COUNTY	TOTAL SHEETS	SHEET NO.
		DRAWN -	REVISED -			41	15 BR-2	LIVINGSTON	64	52
	PLOT SCALE = 50.0000 ' / IN.	CHECKED -	REVISED -					CONTRACT NO. 66691		
	PLOT DATE = Oct 16, 2009 - 03:12:49 PM	DATE -	REVISED -		SCALE: SHEET NO. OF SHEETS STA. TO STA.			ILLINOIS FED. AID PROJECT		