SHEET SA 13 of SA110

F.A.U. RTE.	SECTION	COUNTY	TOTAL SHEETS	SHEET NO.
3578	15V B-1-R-1	COOK	243	101
STA.		TO STA.		
FED. ROAD DIST. NO.		ILLINOIS	FED. AID PROJECT	

CONTRACT NO. 62388

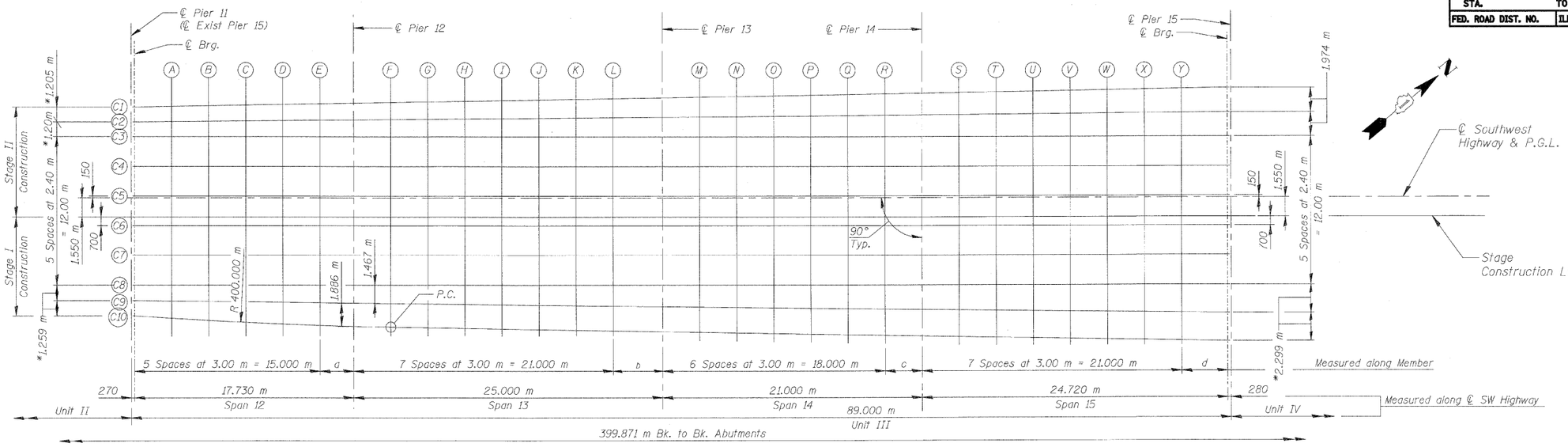

* Measured along ℄ Brg.

PLAN

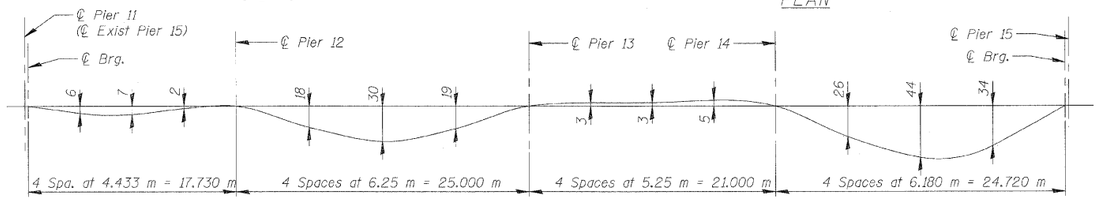

DEAD LOAD DEFLECTION DIAGRAM - BEAMS C4 to C7

(Includes the weight of concrete only)

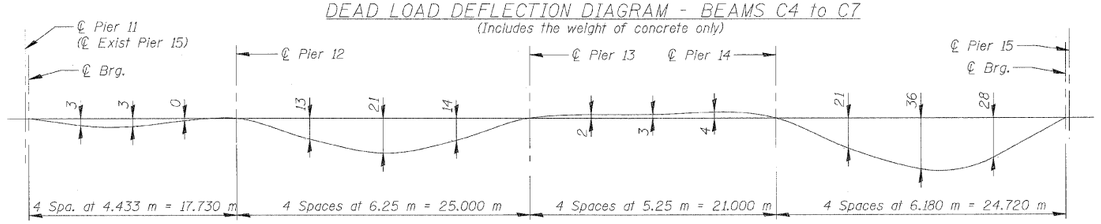

DEAD LOAD DEFLECTION DIAGRAM - BEAMS C1, C2 & C10

(Includes the weight of concrete only)

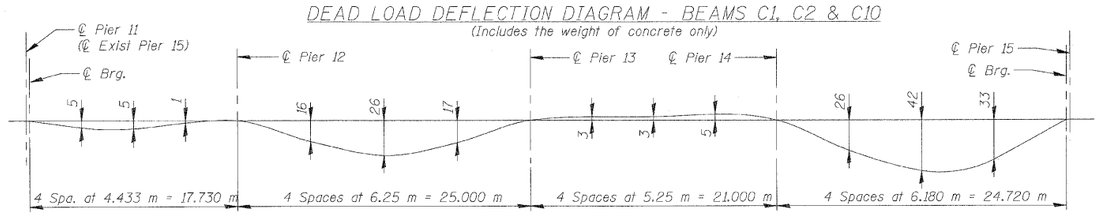

DEAD LOAD DEFLECTION DIAGRAM - BEAMS C3, C8 & C9

(Includes the weight of concrete only)

Note: The above deflections are not to be used in the field if the Engineer is working from the Theoretical Grade Elevations Adjusted for Dead Load Deflections as shown on sheets SA14 thru SA15.

Line	a (m)	b (m)	c (m)	d (m)
C1	2.733	4.004	3.003	3.724
C2	2.731	4.001	3.001	3.721
C3 TO C8	2.730	4.000	3.000	3.720
PGL	2.730	4.000	3.000	3.720
Stage Constr. Line	2.730	4.000	3.000	3.720
C9	2.731	4.002	3.001	3.722
C10	2.752	4.004	3.003	3.724

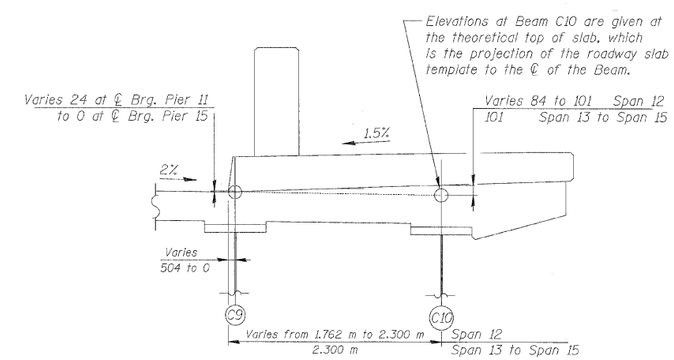

LOCATION OF ELEVATIONS AT FASCIA BEAM

NOTES

1. See Sheet SA9 for fillet height detail
2. All dimensions are in millimeters (mm) except as noted.

REVISIONS	
NAME	DATE

ILLINOIS DEPARTMENT OF TRANSPORTATION

TOP OF SLAB ELEVATIONS - UNIT III-A

SOUTHWEST HIGHWAY OVER
B&O RAILROAD AND STONY CREEK

FAU 3578 SECTION 15V B-1-R-1
STRUCTURE NUMBER 016-2771
COOK COUNTY STATION 4+716.497

SCALE: NONE DRAWN BY: E. Mroozek
DATE: 6/17/09 CHECKED BY: G. Hatlestad

PATRICK ENGINEERING INC.
LISLE, ILLINOIS

tkoeppen(Rdwy.Lisle) 6/26/2009 11:39:46 AM Q:\IDOT\9556_A0\Drawings\STRUCT\13 Top slab ElevUnit III A.dgn