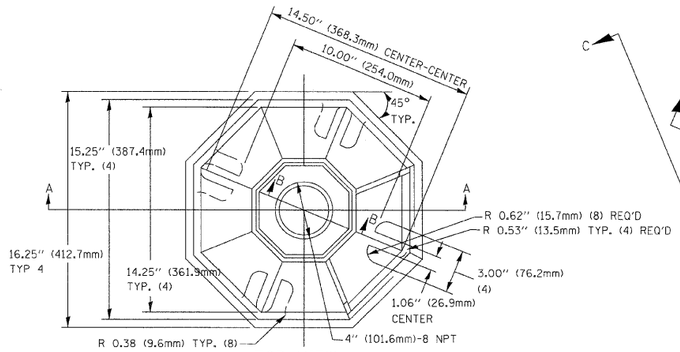


TOP VIEW

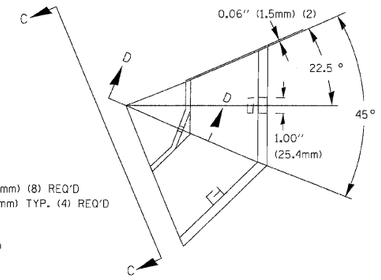


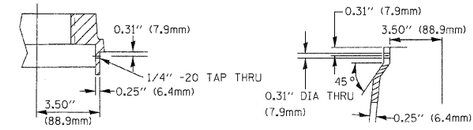


SECTION B-B

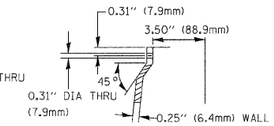


SECTION D-D

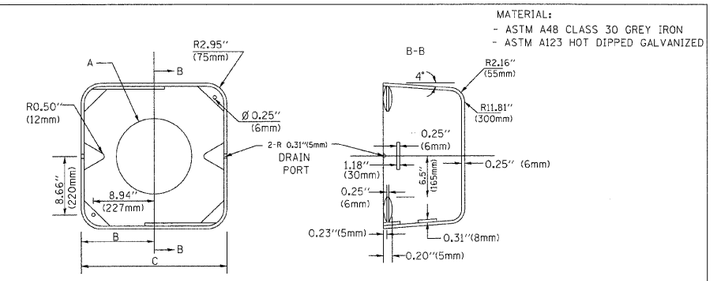


| TYPE | A | B | C | HEIGHT | WEIGHT |
|---|---|---|---|---|---|
| I | Ø 10.125"(257mm) | 9.5"(241mm) | 19"(483mm) | 12" (300mm) | 24kg |
| II | Ø 11.125"(283mm) | 10.75"(273mm) | 21.5"(546mm) | 12" (300mm) | 26kg |

SHROUD DETAIL

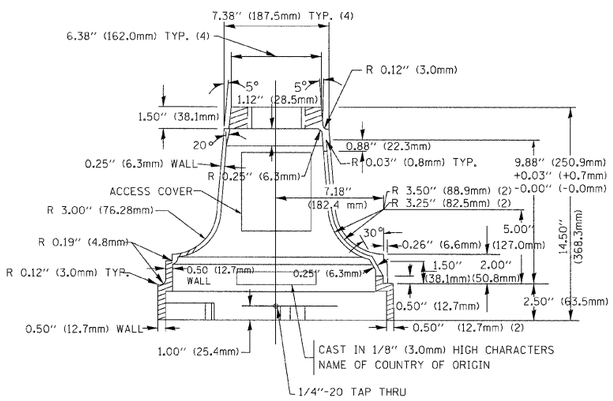


SECTION A-A

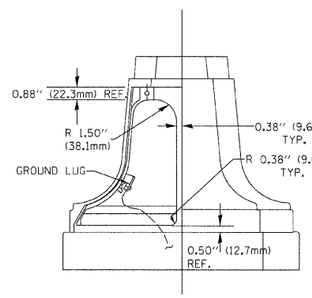


VIEW C-C

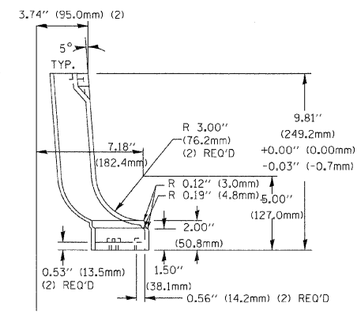


TRAFFIC SIGNAL POST - MOUNTING BASE - TYPE A

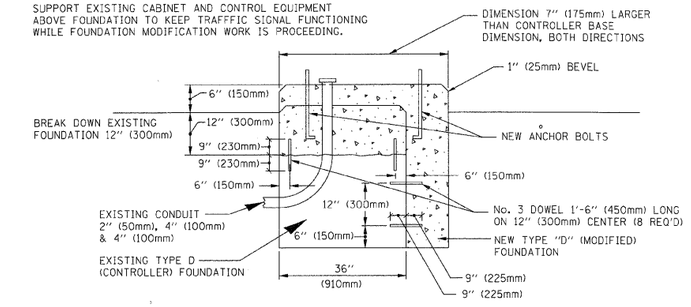


MODIFY EXISTING TYPE "D" FOUNDATION

(NOT TO SCALE)

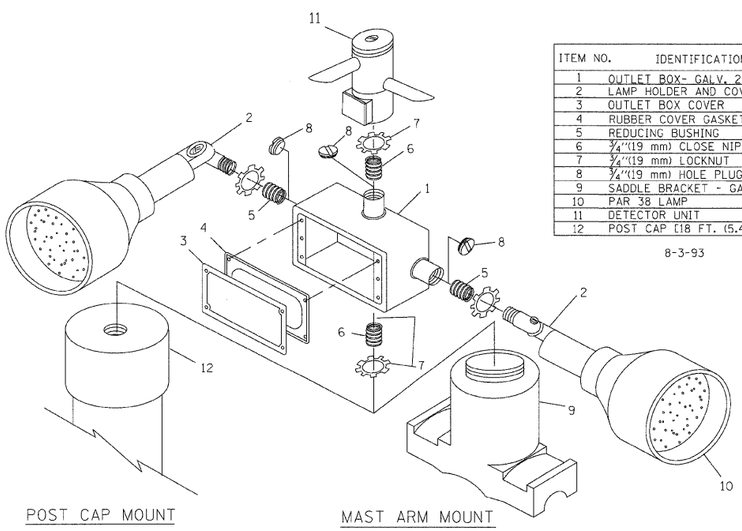


POST CAP MOUNT

MAST ARM MOUNT

EMERGENCY VEHICLE DETECTOR WITH CONFIRMATION BEACON MOUNTING DETAIL

| ITEM NO. | IDENTIFICATION |
|---|---|
| 1 | OUTLET BOX- GALV. 21 CU.IN. (0.000344 CU-M) |
| 2 | LAMP HOLDER AND COVER |
| 3 | OUTLET BOX COVER |
| 4 | RUBBER COVER GASKET |
| 5 | REDUCING BUSHING |
| 6 | ¾"(19 mm) CLOSE NIPPLE |
| 7 | ¾"(19 mm) LOCKNUT |
| 8 | ¾"(19 mm) HOLE PLUG |
| 9 | SADDLE BRACKET - GALV. |
| 10 | PAR 38 LAMP |
| 11 | DETECTOR UNIT |
| 12 | POST CAP [18 FT. (5.4 m) POST MIN.] |

8-3-93

NOTES:

1. ALL ELECTRICAL ITEMS, EXCEPT ITEMS #2 AND #11 SHALL BE ALUMINUM OR GALVANIZED
2. ITEM #1- OZ/GEDNEY FSX-1-50 OR EQUIVALENT
   ITEM #2- MULBERRY CON-O-SHADE LAMP SHIELD OR EQUIVALENT
   ITEM #9- "BAND-IT" SADDLE BRACKET OR EQUIVALENT
3. WHEN POST MOUNTING IS SPECIFIED, ITEM #9 SHALL NOT BE REQUIRED. THE DETECTION UNIT SHALL BE MOUNTED DIRECTLY ON TOP OF THE CAP BY DRILLING AND TAPPING A ¾"(19 mm) HOLE WITH PIPE THREADS. THE POST CAP SHALL EITHER BE SCREWED TO THE TOP OF THE POST OR A MINIMUM OF 3 TIGHTENING SCREWS SHALL BE REQUIRED ON EACH CAP.

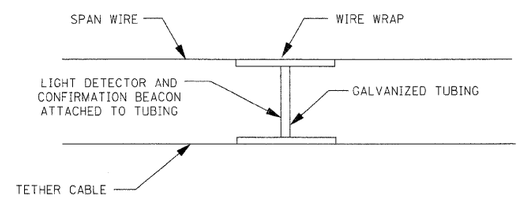


LIGHT DETECTOR AND CONFIRMATION BEACON MOUNTING FOR TEMPORARY TRAFFIC SIGNALS

(NOT TO SCALE)

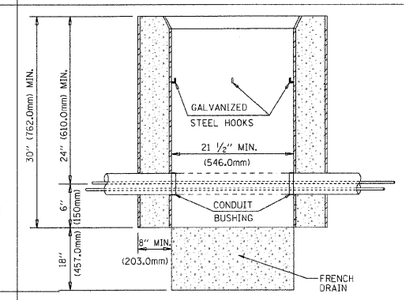


ELEVATION

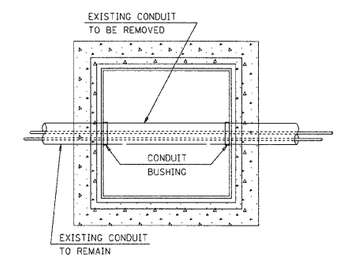


PLAN

NOTES:

1. REMOVAL OF EXISTING CONDUIT FROM THE HANDHOLE AND THE INSTALLATION OF THE CONDUIT BUSHING SHALL BE INCIDENTAL TO THE HANDHOLE.

DETAIL
HANDHOLE TO INTERCEPT EXISTING CONDUIT
N.T.S.

| REVISIONS | |
|---|---|
| NAME | DATE |
| | |

ILLINOIS DEPARTMENT OF TRANSPORTATION

DISTRICT 1

STANDARD TRAFFIC SIGNAL DESIGN DETAILS

SCALE: VERT. NONE HORIZ.
DATE 1-01-02

DRAWN BY: RWP
DESIGNED BY: DAD
CHECKED BY: DAZ
SHEET 4 OF 4


REGINA WEBSTER AND ASSOC. INC.
CIVIL ENGINEERING CONSULTANTS
6160 North Cicero Avenue, Suite 500
Chicago, Illinois 60623-1369
RWA Regina Webster & Associates, Inc.


| | | | |
|---|---|---|---|
| FILE NAME = $FILE1$ | USER NAME = $USER$ | DESIGNED - DW | REVISED - ___ |
| | | DRAWN - DW | REVISED - ___ |
| | PLOT SCALE = $SCALE$ | CHECKED - JS | REVISED - ___ |
| | PLOT DATE = $DATE$ | DATE - 09/01/09 | REVISED - ___ |

**STATE OF ILLINOIS**
**DEPARTMENT OF TRANSPORTATION**

**STANDARD TRAFFIC SIGNAL DESIGN DETAILS – SHEET 4 OF 4**

SCALE: NONE | SHEET NO. 6 OF 12 SHEETS | STA. _____ TO STA. _____

| F.A.P. RTE. | SECTION | COUNTY | TOTAL SHEETS | SHEET NO. |
|---|---|---|---|---|
| VAR. | 2009-098 TS | WILL | 12 | 6 |

CONTRACT NO. 60154

FED. ROAD DIST. NO. _ | ILLINOIS | FED. AID PROJECT